audiophony public-address

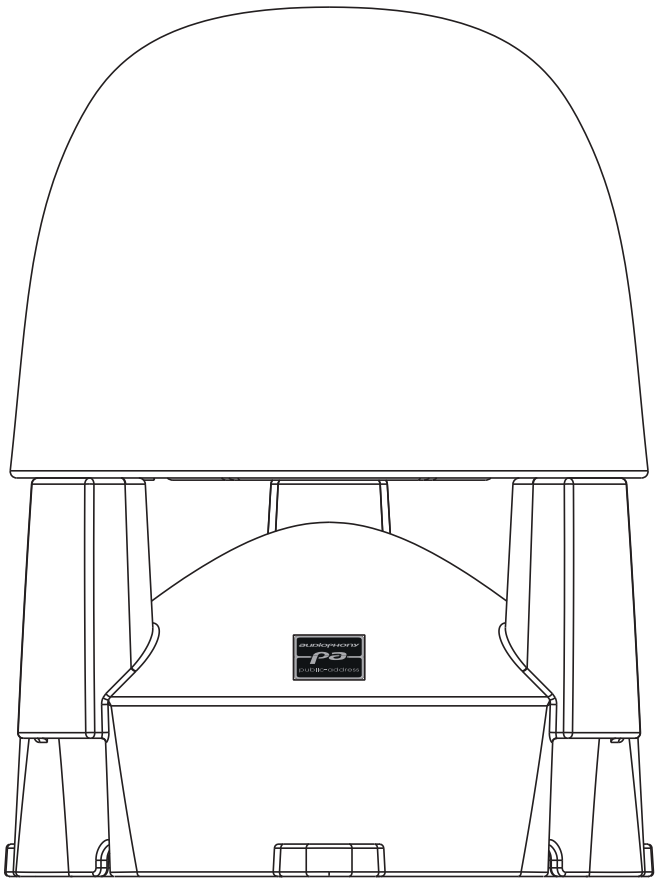

PARK100

Outdoor terminal speaker for 100 V or 8 Ohms amplifier.

Power outputs	15 / 30 / 60 W / OFF / 8 Ohms 60 W
Voltage	100 V / 8 Ohms
Components	1 x 5.25" + 1 x 0.8"
Sensitivity (1W/1m)	86 dB
Max SPL	103 dB continuous / 109 dB max
Frequency response (-3dB)	70 - 15000 Hz
Dispersion (-6 dB)	360° x 90°
Crossover frequency	3.2 kHz
Material	ABS green
Holding	Screw-on feet
Connectors	Waterproof cable on gland IP66
Dimensions	314 (diam) x 402 (H) mm
Weight	7.5 Kg

audiophony
public-address

Wiring

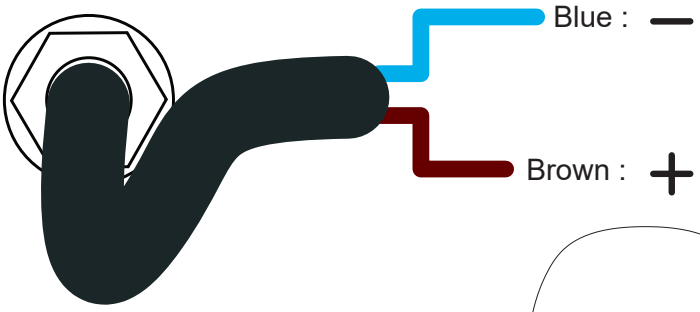

Dangerous voltage
Speakers must be connected last to the amplifier .
Turn the amplifier on when the installation is over and has been checked thoroughly.

Connect the two wires, observing the correct polarity.
Power is selected by using the selector on the underside of the dome.

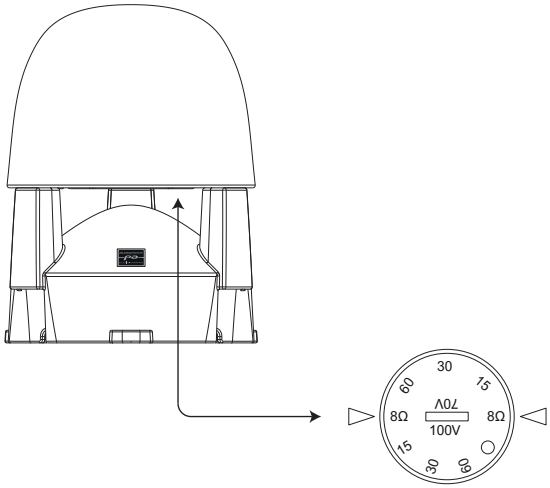

Caution:
The sum of all connected speakers must not exceed the maximum power of your amplifier.

Installation

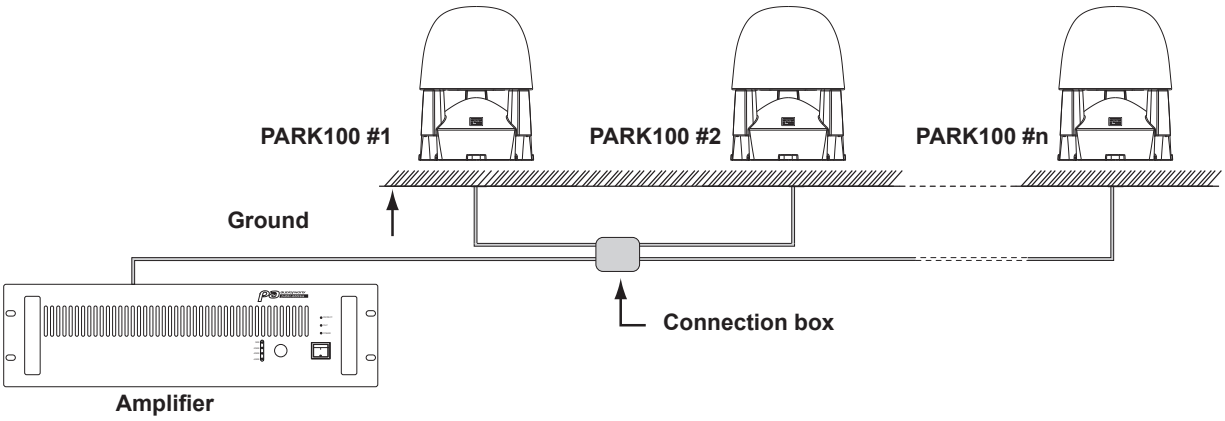

Size

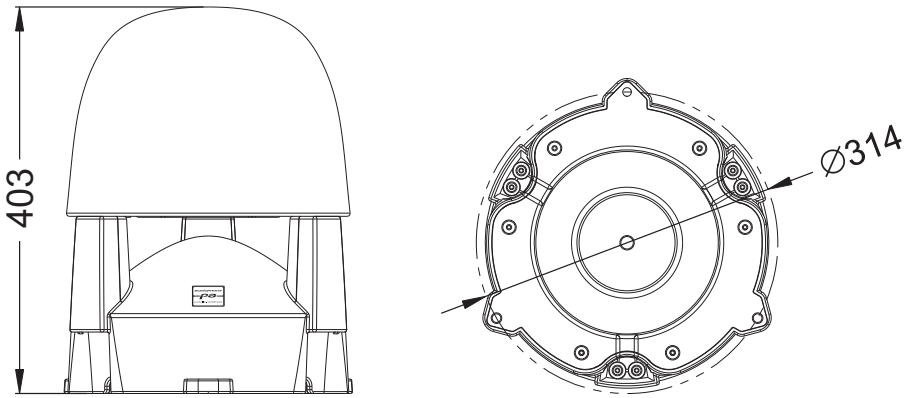

Because AUDIOPHONY® takes the utmost care in its products to make sure you only get the best possible quality, our products are subjects to modifications without prior notice. That is why technical specifications and the products physical configuration might differ from the illustrations.
Make sure you get the latest news and updates about the AUDIOPHONY® products on www.audiophony-pa.com
AUDIOPHONY® is a trademark of HITMUSIC S.A. - 595 Rue de la Pièce Grande - 46230 FONTANES - FRANCE