audiophony
public-address

CHP610

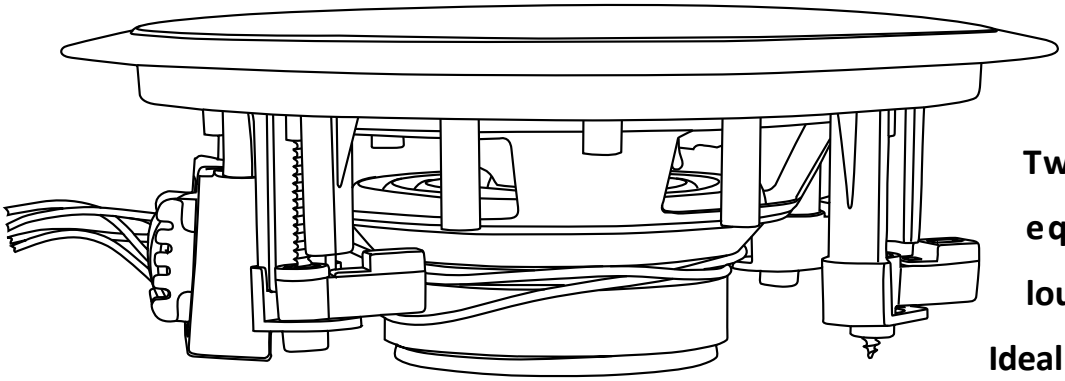

Two-way ceiling speaker equipped with a 16 cm loudspeaker and a tweeter. Ideal for ambient sound systems in places such as hotels and commercial areas.

Power	2.5 or 5 or 10 Watts at 100V - depending on the connection
Power supply	100 V
Impedances	4 kΩ or 2 KΩ or 1 KΩ
Components	6.5-inch loud speaker and 1-inch tweeter
Sensitivity (1W/1m)	93 dB, +/-3dB
Frequency response	110 Hz - 16 KHz
Construction	White ABS body, white metal grid
Hook	4 screw-on feet
Connections	4-pin connector (yellow 5W/red 10W/blue 2.5W/common blue)
Cut-out diameter for assembly	Ø200mm
Dimensions	Ø230x 90 mm
Weight	1.4 kg

audiophony public-address

Wiring

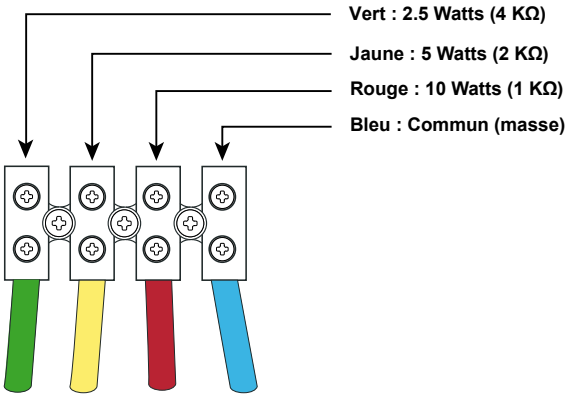

The power of theCHP610 ceiling light is determined by the cables connected to the amplifier.
The colour code opposite shows the different wattages available depending on the colour of the cable.
You must ensure that the sum of the powers of all the loudspeakers connected to the amplifier does not exceed the maximum power of the amplifier.

1 - Always connect the black cable to the "COM" terminal on the amplifier output terminal block.
2 - Select the cable of the colour that corresponds to the desired power.
3 - Connect the selected cable to the 100V terminal on the amplifier output terminal block.

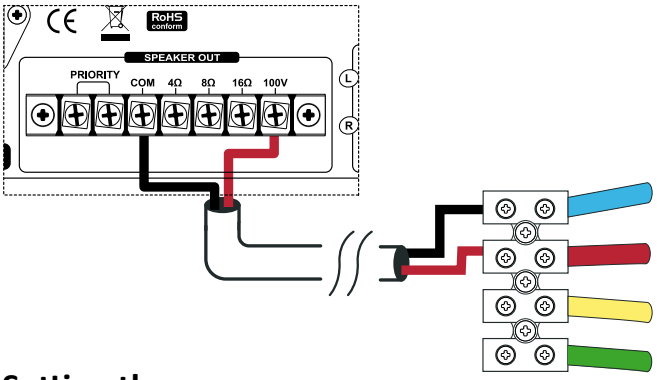

Caution: Dangerous voltage
The speakers should be connected to the amplifier last.
Switch on the amplifier once the installation has been completed and checked

Opposite is an example of wiring for a selected power of 10 watts.

Setting the scene

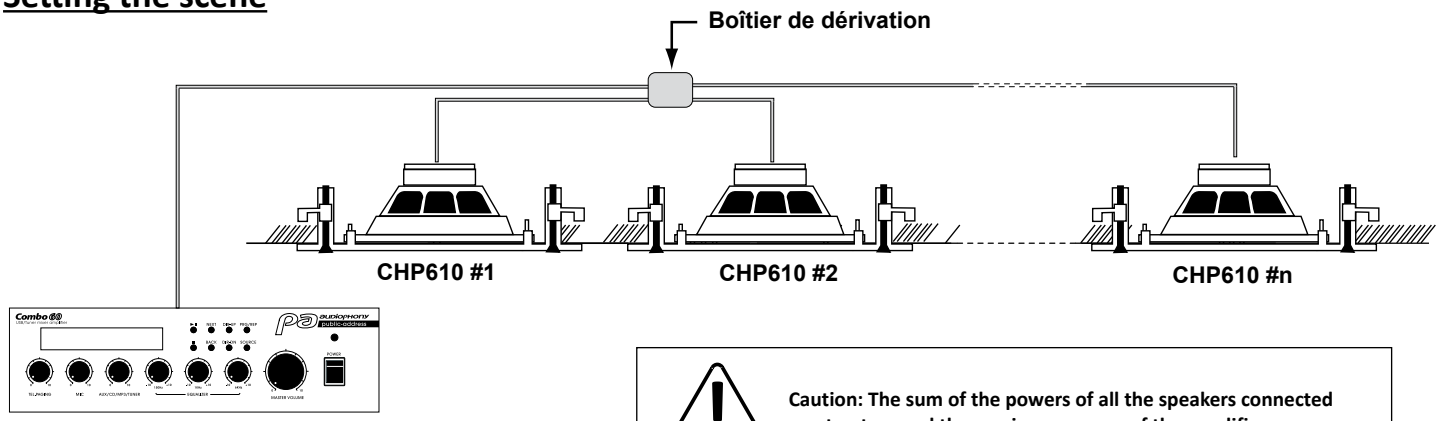

Source / Amplificateur

Caution: The sum of the powers of all the speakers connected must not exceed the maximum power of the amplifier.

Dimensions

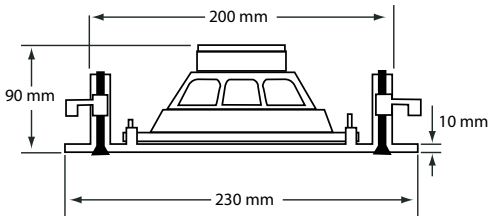

Because AUDIOPHONY® takes the utmost care in its products to make sure you only get the best possible quality, our products are subjects to modifications without prior notice. That is why technical specifications and the products physical configuration might differ from the illustrations.
Make sure you get the latest news and updates about the AUDIOPHONY® products on www.audiophony-pa.com
AUDIOPHONY® is a trademark of **HITMUSIC S.A.S** - 595 Rue de la pièce Grande - 46230 FONTANES - FRANCE